DRAWING FOR CUSTOMER

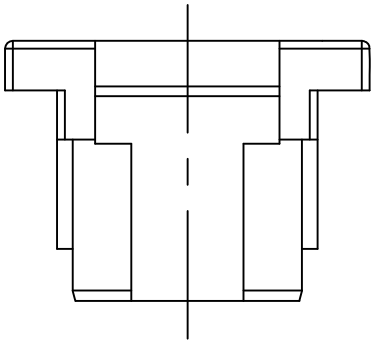

KB901- XX H B L 2 A

- XX: Pin No.
- H: Housing
- B: Back buckle
- L: With Lock
- 2: Mold No.
- A: Version

■Specifications:
- ●Rated Voltage: 50V AC,DC
- ●Rated Current: 1A AC,DC
- ●Withstand Voltage: 500V AC/minute
- ●Contact Resistance: 20mΩ max
- ●Insulation Resistance: 100MΩ min
- ●Temperature Range: -25°C~+85°C

■Material:
- ●Insulation: PA66 UL94-V0
  Color: White

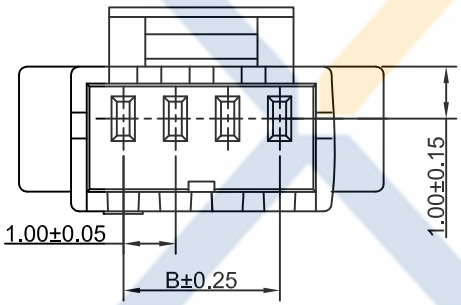

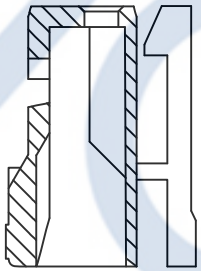

Section:A-A

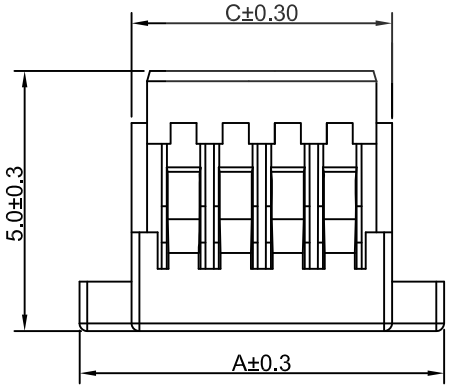

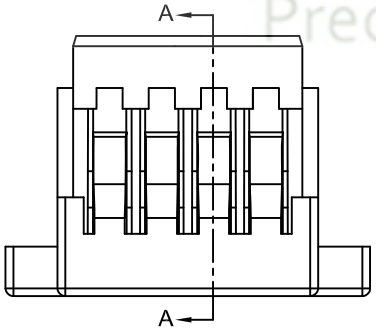

Poles	Dimension (mm)			Poles	Dimension (mm)		
	A	B	C		A	B	C
02	5.00	1.00	3.00	12	15.00	11.00	13.00
03	6.00	2.00	4.00	13	16.00	12.00	14.00
04	7.00	3.00	5.00	14	17.00	13.00	15.00
05	8.00	4.00	6.00	15	18.00	14.00	16.00
06	9.00	5.00	7.00	16	19.00	15.00	17.00
07	10.00	6.00	8.00	17	20.00	16.00	18.00
08	11.00	7.00	9.00	18	21.00	17.00	19.00
09	12.00	8.00	10.00	19	22.00	18.00	20.00
10	13.00	9.00	11.00	20	23.00	19.00	21.00
11	14.00	10.00	12.00				

XYCO Precision connectors

XYCO 东莞市轩业电子科技有限公司
TEL: 0769-8297 9981/2/3 http://www.XYCO.com.cn

DATE 日期	VER 版本	CHANGE HISTORY 變更歷史	CHANGED NAME 修改後料號	DRAWING 變更者
2015-08-05	A		KB901-XXHBL2A	Devin

TOLERANCE 公 差: .X=±0.30, .XX=±0.20, .XXX=±0.10

DRAWING 設計者	Devin	KB901-XXHBL2A	
CHECKED 審查	Thomas	PART NO. 料號	
APPROVED 核准	William	DWG NO. 圖號	PE2011A

UNIT 單位: mm

PRODUCT NAME 產品名稱: SH1.0mm Wire To Board Housing With Back Lock